ACW-Lite Box Ref. 4.1x (Lite 3)

Guidebook for the ACW-Lite Box

Revision: 1.09

Status: Preliminary

 © Gi-E GmbH Zaberfeld

Table of Contents

Table of Contents ... 2
Safety Guidance, Warranty Conditions ... 3
Copyright ... 4
Document History ... 5
Brief Description ACW-Lite Box ... 6
Analogue Inputs ... 7
Piggyback DS2 ... 8
Piggyback DMS ... 10
Piggyback BIP ... 12
Piggyback Multi-Purpose (UMP) ... 14
Temperature Inputs ... 17
Digital Inputs DCW ... 18
Digital Outputs (CAN-VIEW) ... 20
Power Supply ... 22
USB Interface ... 24
CAN-1 Data Bus ... 25
CAN-2 Data Bus ... 27
USER-Menu ... 29
BOOT-Menu ... 30
CAN Message ... 33
View Frontside ... 36
View Backside ... 37
List of Sensors ... 38
Specification ACW-Lite Box ... 40

Safety Guidance, Warranty Conditions

To avoid malfunctions or defects it is strictly recommended to read this guidebook carefully before using this system.

These product is not designed for use in life support appliances or systems where malfunction of these product can reasonably be expected to result in personal injury.
(Gi-E customers using or selling the product for use in such applications do so at their own risk and agree to fully indemnify Gi-E for any damages resulting from such improper use or sale)

Gi-E GmbH warrants, that the product will be free of defects in materials and workmanship for that period as may be expressly specified by Gi-E GmbH or required by applicable law.
The warranty does not cover failures of the product which result from accident, misuse, alterations (done by others than by Gi-E GmbH), use together with not suitable equipment, moisture, corrosive environments, shipping, high voltage surges or any abnormal working conditions.

During installation the power supply has to be disconnected and all devices have to be switched off.

The connection of the ACW-Lite Box should be only done with cables and parts specified in this guidebook or standard industrial products.

Under no circumstances specified imiting values, e.g. U_{max}, I_{max}, should be exceeded (see also the **IMPORTANT-** Notices).
Stress above one or more of the limiting values may cause permanent damage to the device.

The opening of the ACW-Lite Box is not necessary and is not covered by the warranty.

The use of the ACW-Lite Box is only allowed under the specified environmental conditions, especially in clean, dry and antistatic surroundings.

Copyright

All rights reserved.

No parts of this guidebook may be reproduced, photocopied, transmitted, transcribed or stored in a retrieval system in any form or by any means without the express prior written consent of the company Gi-E GmbH in Zaberfeld.

All brand names mentioned are trademarks or registered trademarks of their respective holders. Brand names without e.g. ® or ™ must not be free names.

Gi-E GmbH reserves the right to revise the guidebook at any time, without the obligation to inform someone.

Copyright © 2012, Gi-Electronic GmbH, Zaberfeld

Document History

Revision	Date	Publisher	Remarks / Changes
1.00	26.10.01	Christian Spohr	first edition
1.01	22.11.01	CS	various changes
1.02	10.01.02	CS	Description Piggyback UMP changed
1.03	23.01.02	CS	various changes
1.04	24.10.05	CS	CAN-1 and CAN-2 Data Bus
1.05	20.10.10	Joachim Lindenmann	Revision change to Rev. 4.1x (Lite 3)
1.06	09.03.11	Joachim Lindenmann	New specifications
1.07	10.05.11	Joachim Lindenmann	Revised some errors
1.08	25.05.11	Joachim Lindenmann	Updated specifications
1.09	30.07.12	Karsten Mauz	various changes

Brief Description ACW-Lite Box

The ACW-Lite Box reads in analogue data, filters and averages this data (oversampling) and writes out to CAN-Bus.
Temperature sensors can be connected and also digital data can be read in.
All data ins are given out on the CAN-bus.
Digital outputs for signal LEDs are present.
There is an USB interface for configuration.

Features:

- 16 analogue input channels
  - arbitrarily sensor groups
  - adjustable filter and boosting and offset compensation
  - continuous output via CAN
- 4 temperature input channels
  - separate output via CAN
- CAN interface sensor connectable
- 24 digital input channels
  - compatible with TTL
  - isolated via opto-coupler
  - output via CAN
- 3 digital output channels for signal LEDs
  - open collector outputs
  - isolated via opto-coupler
- configuration
  - with 3 keys and display
  - with PC configuration software
- software update via USB interface
- power supply DC 10 ..50V
- small and rugged box

Analogue Inputs

To connect various sensors the 16 analogue input channels of the ACW-Lite Box can be combined in groups of four similar inputs in an arbitrary number (1-4). Four different systems are available. Customer adaptations are possible.

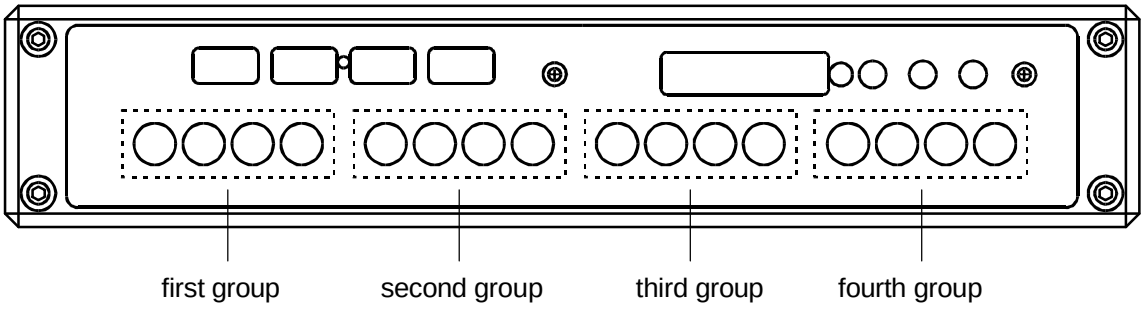

groups (piggybacks), which can be combined in an arbitrary number (1-4):

Piggyback DS2

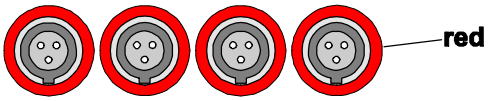

Piggyback DMS

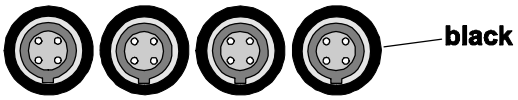

Piggyback BIP_US

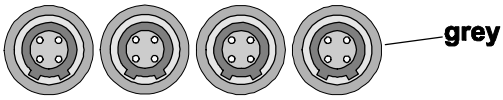

Piggyback Multi-Purpose

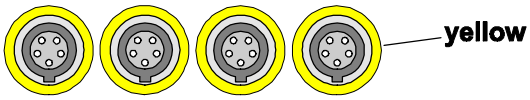

For distinction the plugs have different coding colors.

Piggyback DS2

Front view:

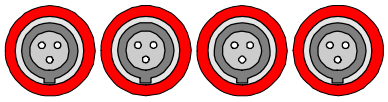

channel 1 2 3 4

Type: single ended input with unipolar sensor supply for active pressure sensors, e.g. DS2 sensors.

Plug:

type:	**LEMOSA**	**EPG.0B.303.HLNS**
coding color:	**red**	
coding:	0°	
pin count:	3	
cable connector:	LEMOSA	FGG.0B.303.CLAD42ZR (red bending-guard plastic-coat for thick cable diameter)

Plug connection:

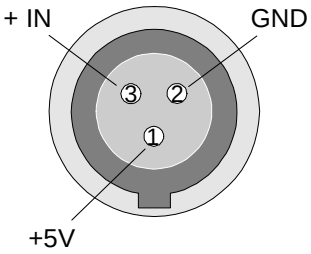

Gain: multiplication factor (software): x1 / x2 / x4 / x8
hardware divider: 1:1 / 6:1 / 60:1

Filter: > 4th order with edge frequency 3125 Hz
50Hz / 65Hz / 200Hz / filter off (software filter)

Additional: offset compensation by software

+Input: 1. high-impedance or *
2. via 2KΩ pullup connected to $+5V_{Sens}$

* not available on all piggys

Input-range:

gain = x8	–2V…+2V	[divider = 1:1]
gain = x1, x2, x4	–12V…+12V	[divider = 6:1]
not supported by software	–120V…+120V	[divider = 60:1]
CAN output limit (gain • V_{in}):	–10V…+10V	

Default:

channel 1, 2, 3 and 4: gain = x2 [divider = 6:1]
filter = 65Hz
(-Input = internal connected to GND)
+Input = via 2KΩ pullup connected to $+5V_{Sens}$

Input circuit:

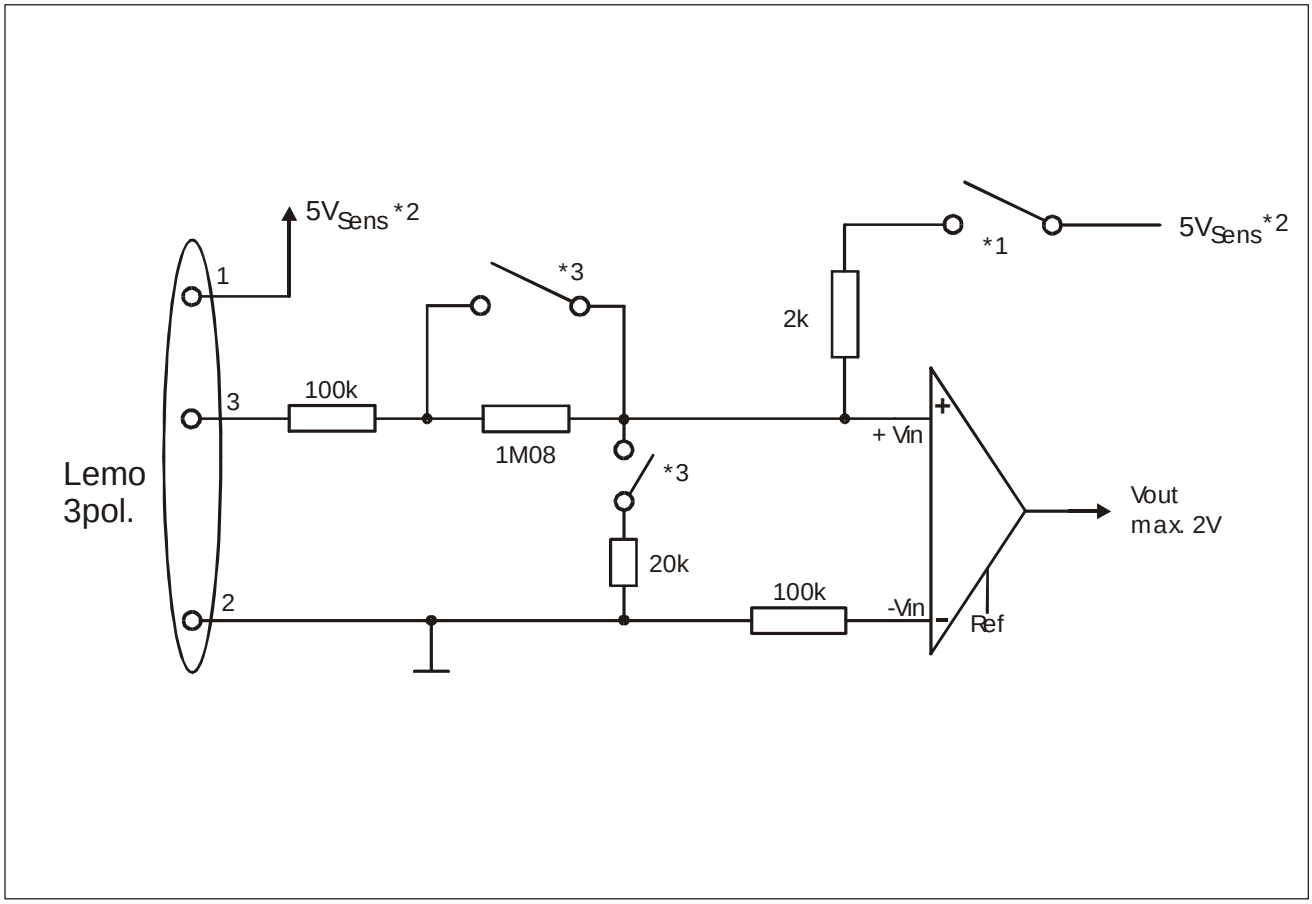

*1) E-Switch (electronic switch, switchable via software):
Piggys without switch have a static pullup to $5V_{Sens}$
Default ➔ closed

*2) Default $5V_{Sens}$, changeable: $2V_{Sens}$ / $5V_{Sens}$ / $10V_{Sens}$ (supported by future software)

*3) Divider: 1:1 / 6:1 / 60:1 (adjusted by the software in dependence on selected gain)

Piggyback DMS

Front view:

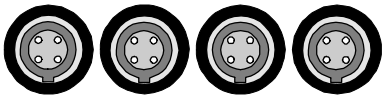

channel 1 2 3 4

Type: differential inputs (+IN und –IN) for passive pressure sensors, e.g. strain gauge (DMS) sensors.

Plug:

type:	**LEMOSA**	**EPG.0B.304.HLNS**
coding color:	**black**	
coding:	0°	
pin count:	4	
cable connector:	LEMOSA	FGG.0B.304.CLAD42ZN (black bending-guard plastic-coat for thick cable diameter)

Plug connection:

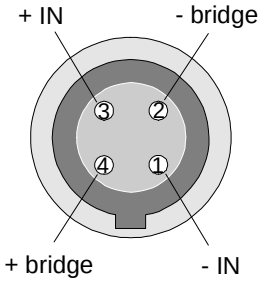

Gain:

V1: multiplication factor: x1 / x10 / x100 / x1000
V2: multiplication factor (software): x1 / x2 / x4 / x8
V_{total} = V1 • V2
V_{total} = x1 / x2 / x4 / x8 / x10 / x20 ..... / x4000 / x8000
hardware divider: 1:1 / 6:1 / 60:1

Filter:

> 4th order with edge frequency 3125 Hz
50Hz / 65Hz / 200Hz / filter off (software filter)

Strain gauge supply:

U_{DMS}: 2V / 5V / 10V

Additional: offset compensation by software

Input-range:

max. 5V for all

gain = x8000	–2mV…+2mV
gain = x1000, x2000, x4000	–12mV…+12mV
gain = x800	–20mV…+20mV
gain = x100, x200, x400	–120mV…+120mV
gain = x80	–200mV…+200mV
gain = x10, x20, x40	–1,2V…+1,2V
gain = x8	–2V…+2V
gain = x1, x2, x4	–5V…+5V (-12V…+12V)
CAN output limit (gain • V_{in}):	–10V…+10V

Default:

channel 1, 2, 3 and 4:	gain	= x100
(for KULITE sens.)	filter	= 65Hz
	U_{DMS}	= 10V

Input circuit:

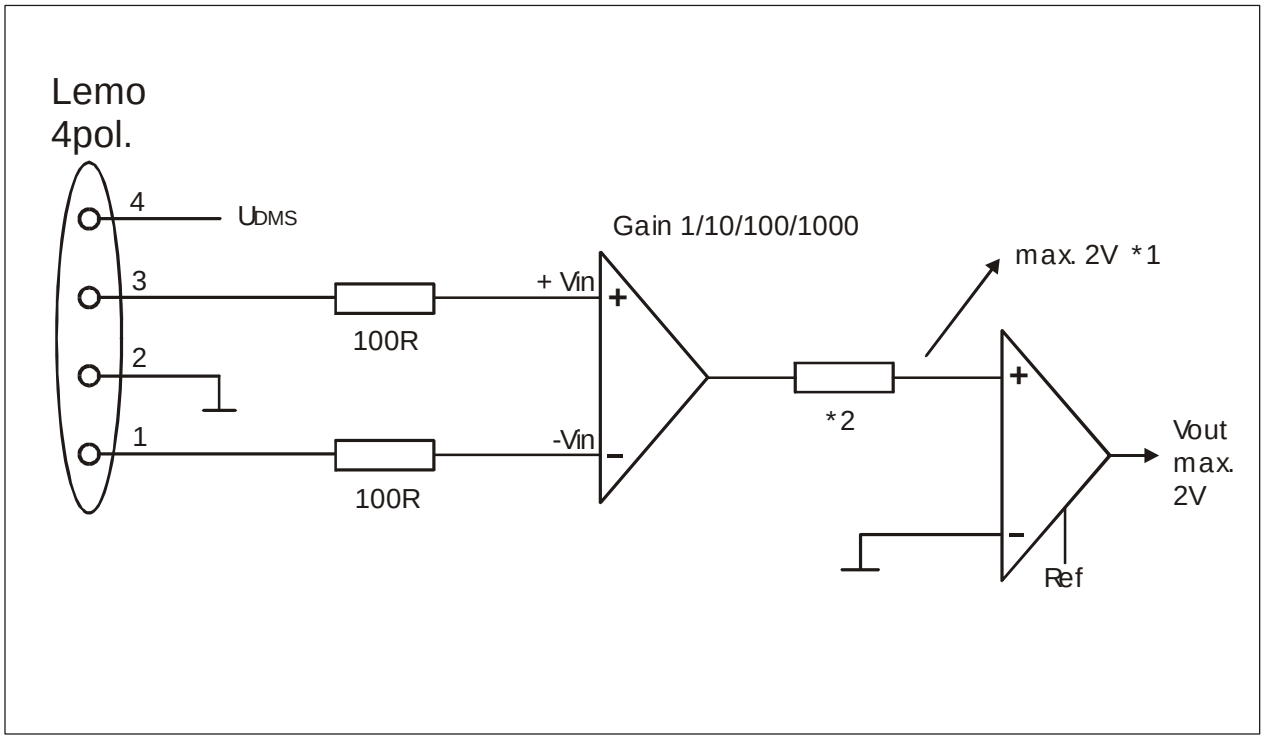

*1) Use Gain and Divider so, that 2V max. appears

*2) Divider: 1:1 / 6:1 / 60:1 (adjusted by the software in dependence on selected gain)

Piggyback BIP

Front view:

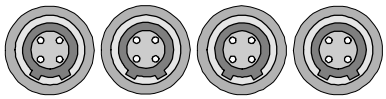

channel 1 2 3 4

Type: single ended input with bipolar sensor supply (+/- 15V) for special sensors

Plug:

type:	**LEMOSA**	**EPB.0B.304.HLNS**
coding color:	grey	
coding:	60°	
pin count:	4	
cable connector:	LEMOSA	FGB.0B.304.CLAD42ZG (grey bending-guard plastic-coat for thick cable diameter)

Plug connection:

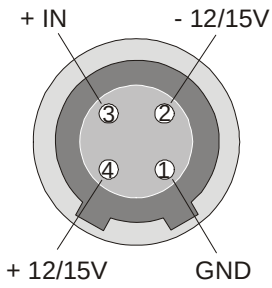

Gain:

multiplication factor (software):	x1 / x2 / x4 / x8
hardware divider:	1:1 / 6:1 / 60:1

Filter: > 4th order with edge frequency 3125 Hz
18Hz / 20Hz / 200Hz / filter off (software filter)

Additional:

offset compensation	by software
+Input:	1. high-impedance

Input-range:

gain = x8	–2V…+2V	[divider = 1:1]
gain = x1, x2, x4	–12V…+12V	[divider = 6:1]
not supported by software	–120V…+120V	[divider = 60:1]
CAN output limit (gain • V_{in}):	–10V…+10V	

Default:

channel 1, 2, 3 and 4: gain = x1 [divider = 6:1]
filter = 20Hz
-Input = connected to GND

Input circuit :

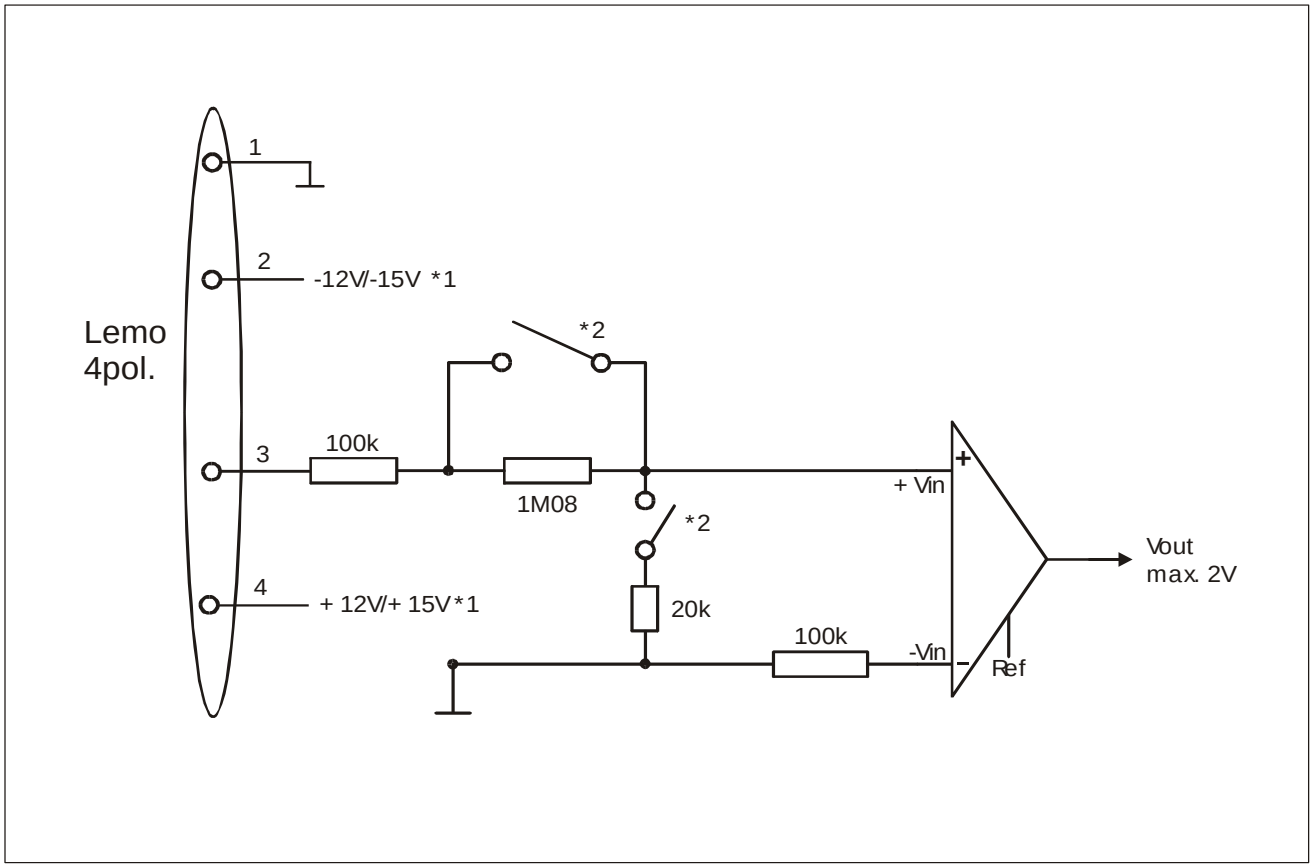

Vout = (1:1 / 1:6 / 1:60) • Vin

*1) selectable by future software; U-negative follows U-positive

*2) Divider: 1:1 / 6:1 / 60:1 (adjusted by the software in dependence on selected gain)

Piggyback Multi-Purpose (UMP)

Front view:

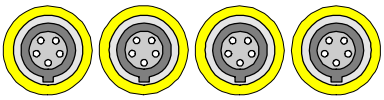

channel 1 2 3 4

Type: single ended input or differential inputs;
with unipolar sensor supply (+5V / +12V) for sensors, e.g. acceleration (+5V), yaw rate (+12V) or potentiometer (+5V).

Plug:

type:	**LEMOSA**	**EPG.0B.305.HLNS**
coding color:	yellow	
coding:	0°	
pin count:	5	
cable connection:	LEMOSA	FGG.0B.305.CLAD42ZJ (yellow bending-guard plastic-coat for thick cable diameter)

Plug connection:

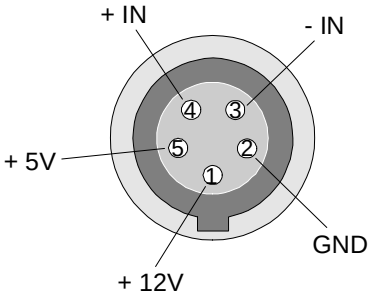

Gain: multiplication factor (software): x0,5 / x1 / x2 / x4 / x8
hardware divider: 1:1 / 6:1 / 60:1

Filter: > 4th order with edge frequency 3125 Hz
18Hz / 20Hz / 200Hz / filter off (software filter)

Additional:	offset compensation -Input:	by software 1. kind of operation: single ended (-Input internal connected to GND) 2. kind of operation: differential inputs (-Input is high-impedance) 3. kind of operation: differential inputs with divider

Input-range:	gain = x8	–2V…+2V [divider = 1:1]
	gain = x1, x2, x4	–12V…+12V [divider = 6:1]
	gain = x0,5	–120V…+120V [divider = 60:1]
	CAN output limit (gain • V_{in}):	–10V…+10V

AIO-Function **Default** (function of the PCB AIO in the system ACW-Classic)	**channel 1, 2, 3 and 4:**	gain filter -Input	= x2 [divider = 6:1] = 20Hz = not used (internal connected to GND)

ADL-Function **customer adjustment** (function of the PCB ADL in the system ACW-Classic)	**channel 1:** acceleration sensor $\mathbf{a_L}$	gain filter -Input	= **x4** (5V sensors) [divider = 6:1] = 20Hz = not used (internal connected to GND)
	channel 2: acceleration sensor $\mathbf{a_Q}$	gain filter -Input	= **x4** (5V sensors) [divider = 6:1] = 20Hz = not used (internal connected to GND)
	channel 3: **DRS** sensor	gain filter -Input	= x2 [divider = 6:1] = 20Hz = **used as differential Input**
	channel 4: **LWS** sensor	gain filter -Input	= x2 [divider = 6:1] = **200Hz** = not used (internal connected to GND)

Input circuit :

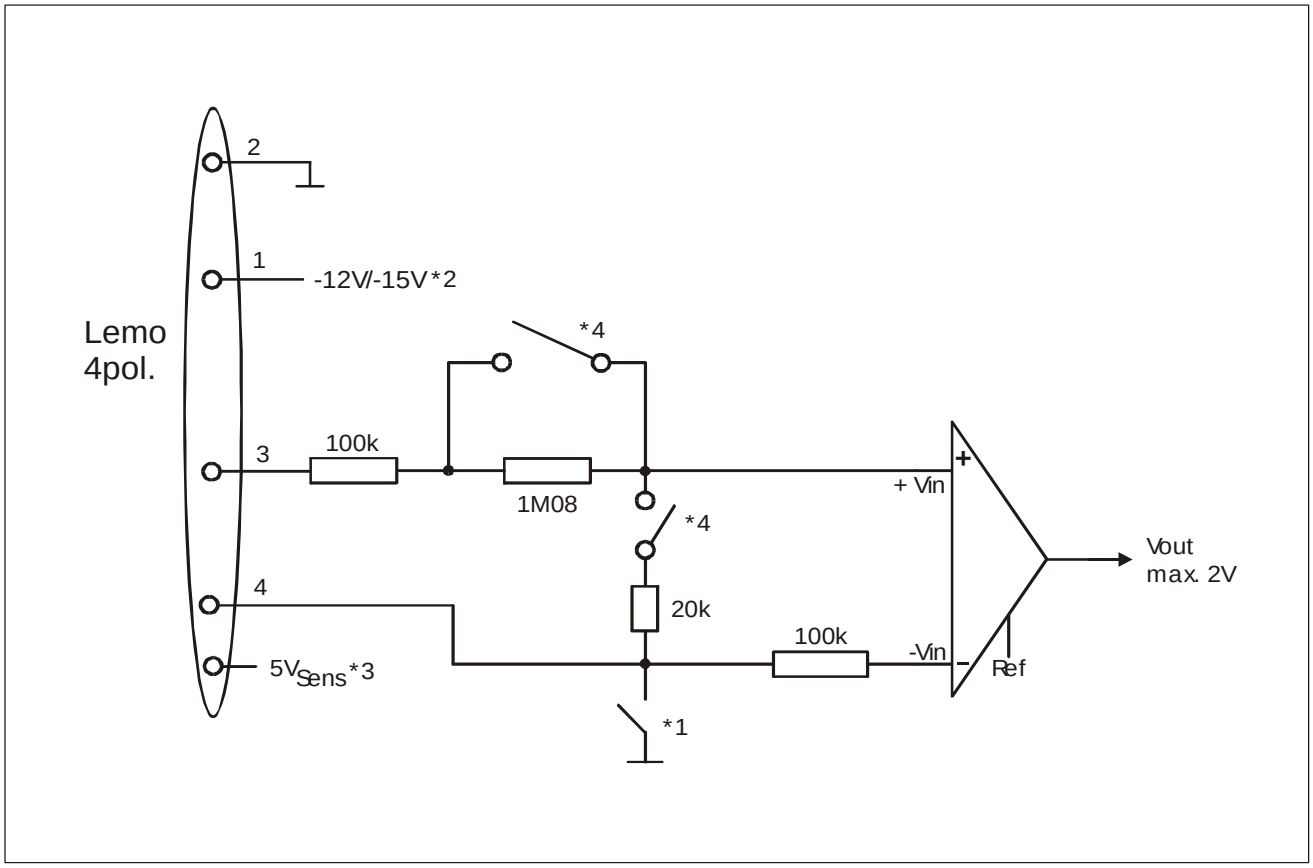

Vout = (1:1 / 1:6 / 1:60) • Vin

*1) E-Switch (electronic switch, switchable via software)
for single-ended signals
Default ➔ open

*2) selectable by future software; U-negative follows U-positive

*3) Default $5V_{Sens}$, changeable: $2V_{Sens}$ / $5V_{Sens}$ / $10V_{Sens}$ (supported by future software)

*4) Divider: 1:1 / 6:1 / 60:1 (adjusted by the software in dependence on selected gain)

Temperature Inputs

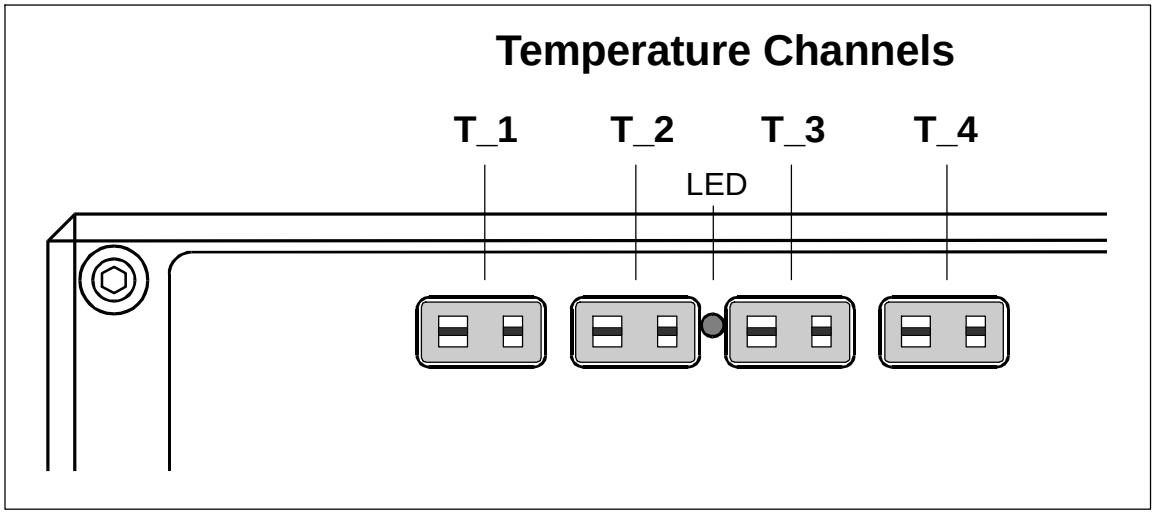

The ACW-Lite Box has 4 galvanic separated temperature channels to connect NiCrNi sensors with standard thermoelectric element plugs.

The measuring range is –200℃ ... +960℃.

The temperature module is an independent system.
Temperature data is obtained via CAN-1bus.

A special configuration software, running on standard PCs, is necessary to configurate the temperature module via USB interface.
With this software it is possible to choose e.g. the CAN Identifier for the temperature messages.

Plug connection: thermoelectric-element

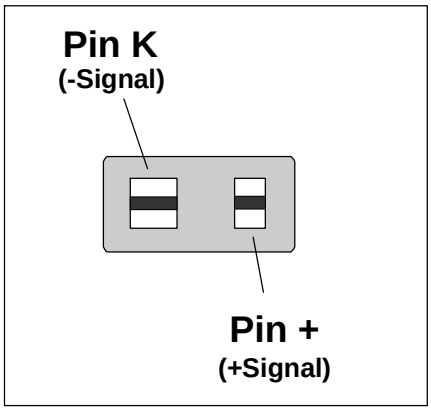

Important **the input voltage range of the temperature channals is U_{therm} = - 40 ... +40mV !**

Digital Inputs DCW

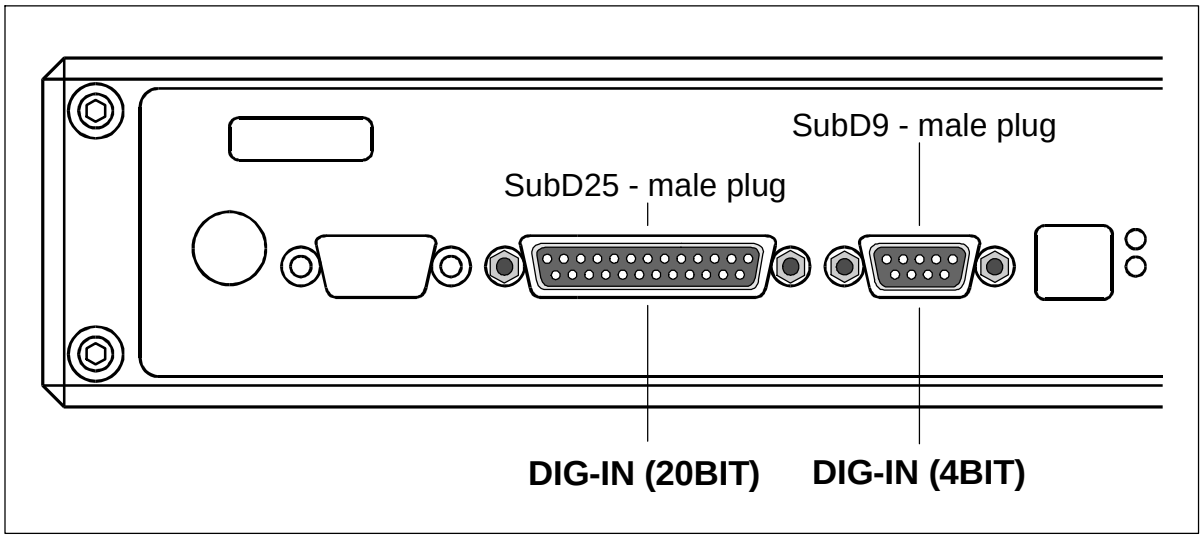

The ACW-Lite Box has 24 digital input channels to read signales like valve states or synchronization signales of external equipments.

The inputs are compatible to TTL.

SubD25 accepts 20 input signals (with common reference potential) isolated against Supply-GND.
SubD9 accepts 4 input signals (with separate reference potential) also isolated against Supply-GND.

The datas are isolated via opto-coupler and the output is over the CAN bus (DCW function).

Plug	Channel	Pin	Signal Description e.g.	Reference / GND
SubD25	1	1	USV1	Pin 24 and Pin 25
	2	2	USV2	Pin 24 and Pin 25
	3	3	ASV1	Pin 24 and Pin 25
	4	4	ASV2	Pin 24 and Pin 25
	5	5	-	Pin 24 and Pin 25
	6	6	EVVL	Pin 24 and Pin 25
	7	7	AVVL	Pin 24 and Pin 25
	8	8	EVVR	Pin 24 and Pin 25
	9	9	AVVR	Pin 24 and Pin 25
	10	10	EVHL	Pin 24 and Pin 25
	11	11	AVHL	Pin 24 and Pin 25
	12	12	EVHR	Pin 24 and Pin 25
	13	13	AVHR	Pin 24 and Pin 25
	14	14	MRA	Pin 24 and Pin 25
	15	16	VLPR1	Pin 24 and Pin 25
	16	18	VLPR2	Pin 24 and Pin 25
	17	19	-	Pin 24 and Pin 25
	18	20	-	Pin 24 and Pin 25
	19	22	MT_SYNC	Pin 24 and Pin 25
	20	23	-	Pin 24 and Pin 25

Plug	Channel	Pin	Signal Description e.g.	Reference / GND
SubD9	21	1	-	Pin 6
	22	2	-	Pin 7
	23	3	-	Pin 8
	24	4	-	Pin 9

The channel allocation with output format is given in the CAN message DCW (see CAN Message).

Input circuit: Digital IN, channel 1-20

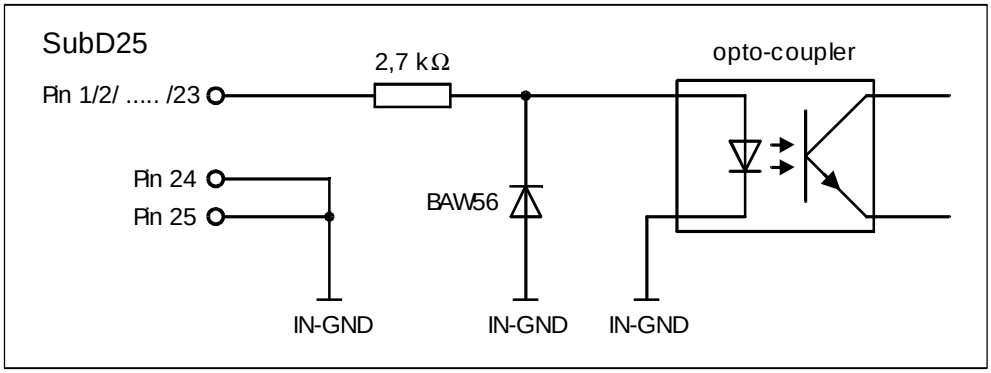

Input circuit: Digital IN, channel 21-24

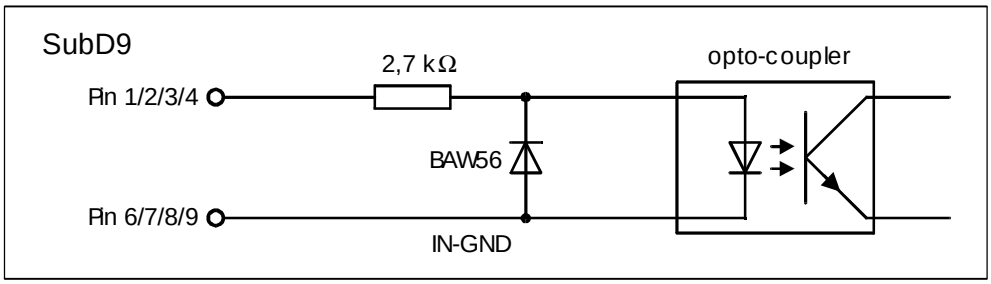

Important **The input circuit is for TTL threshold levels. $U_{max} \leq 30V$!**

Digital Outputs (CAN-VIEW)

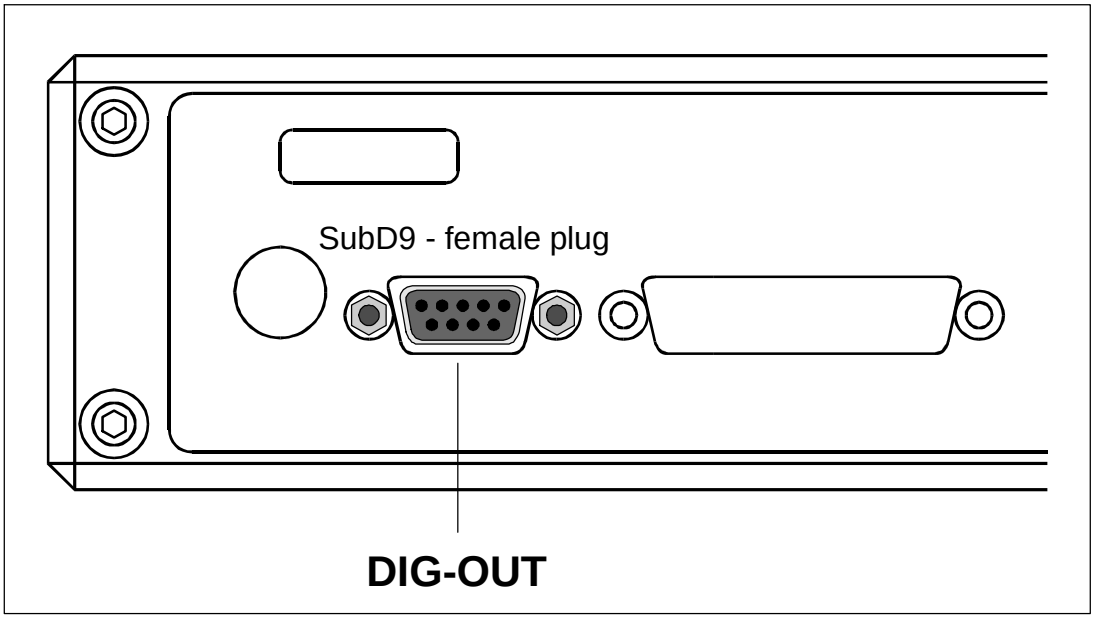

The message CAN-VIEW can be read in and use to drive signal LEDs.

The configuration software supports 3 channels.

The channels are isolated via opto-coupler and the datas are given out via open collector outputs, every signal with his own reference potential (GND).

Plug connection: Digital OUT, channel 1-3 (4)

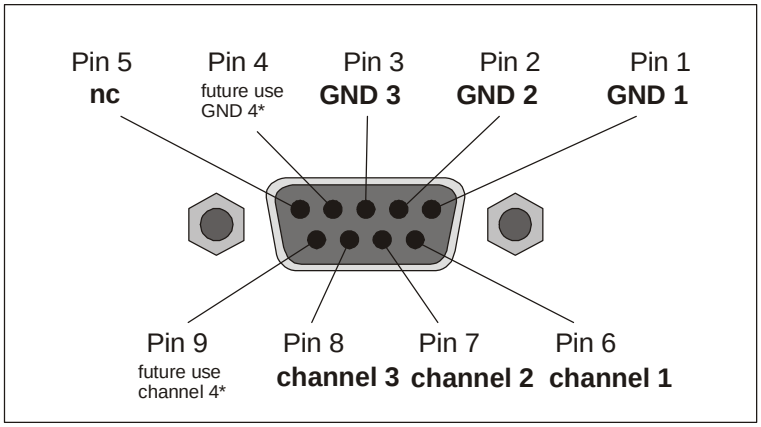

* for future use a fourth channel is build-in.

Output circuit: Digital OUT, channel 1-3 (4)

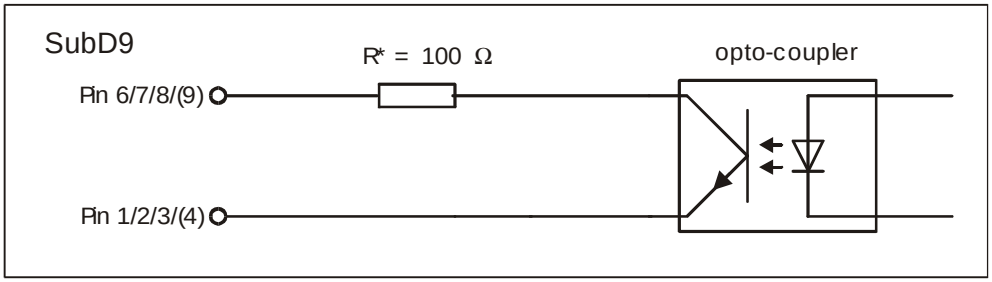

R*: the resistor of 100Ω is for current limitation.

Important **the switchable voltage is maximum U_{max} = +50V DC !**

Power Supply

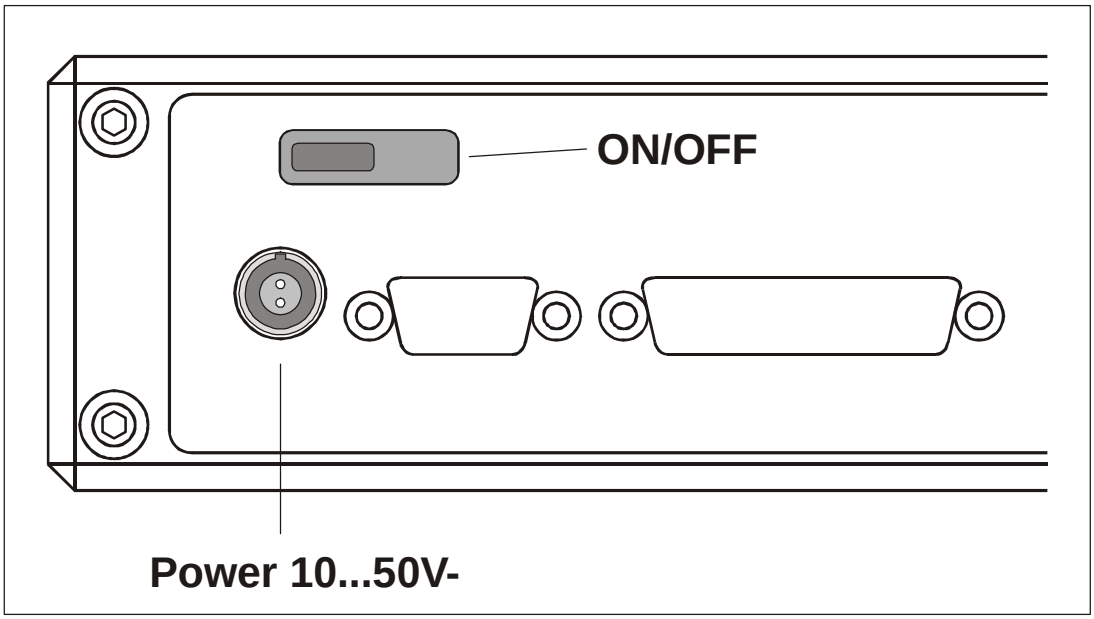

The ACW-Lite Box is designed for the use in car low-voltage supply systems with a standard operating voltage of 12V DC.

The system is protected against reverse voltage supply and overload, which is performed by a thermally sensitive semiconductor (returning in normal state when overload condition is terminated).

The input voltage range is 10 ... 50V DC.

The connection to the car system is done by a special connection cable.

The order to bring the system into service is:

1. connection of all sensors and peripheral units
2. connection of the power supply
3. switching the power on/off switch on the backside

Power terminal, plug female

brand: **LEMOSA**
type: **EPG.1B.302.HLNS**

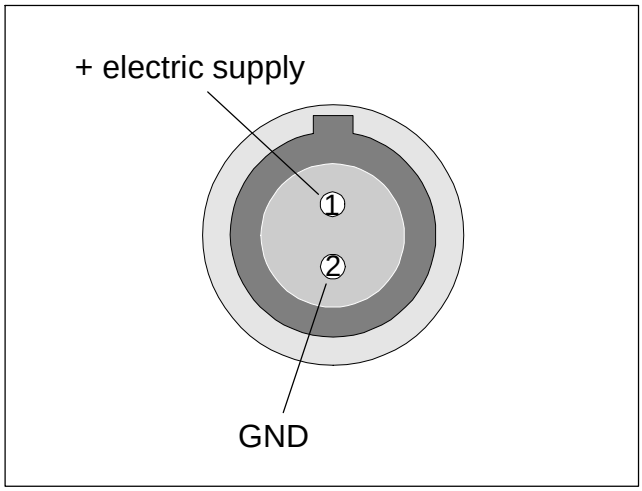

The cable connector, plug male, is as follows:

brand: LEMOSA
type: FGG.1B.302.CLAD42ZN
additional: black bending-guard plastic-coat for big cable diameters

Important	**operating voltage**	**$U_{min} \geq +10V$ DC**
	and	**$U_{max} \leq +50V$ DC !**

USB Interface

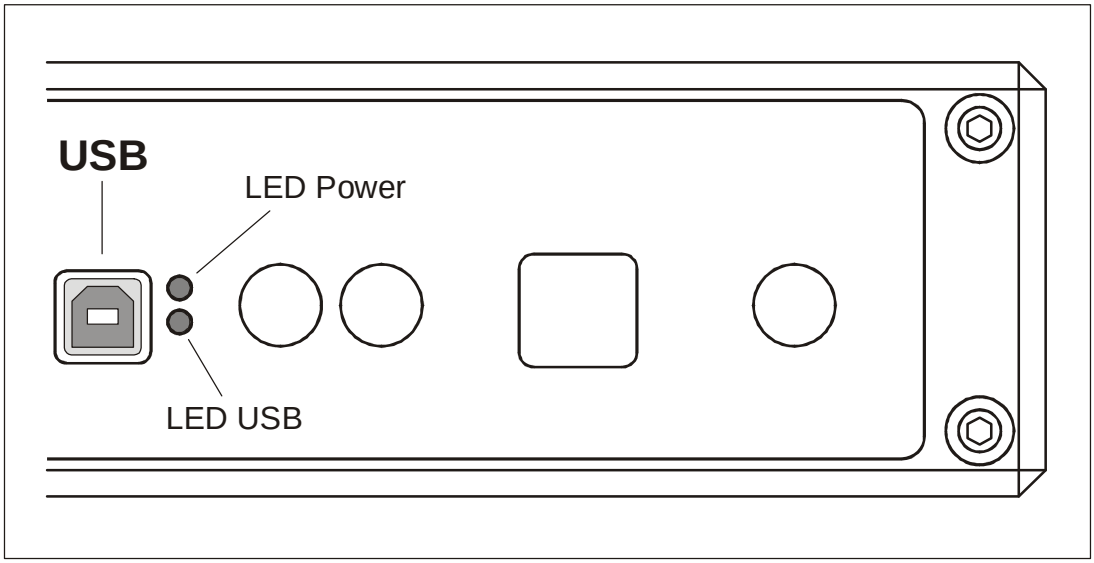

The ACW-Lite Box is equiped with a standard interface USB.

The connection to e.g. PC is done with a standard cable USB-**B**.

The transmission is shown by the yellow LED USB.
Above is the green LED Power located.

Important **To avoid malfunction or defects no other levels or limiting values as specified for USB should be used !**

CAN-1 Data Bus

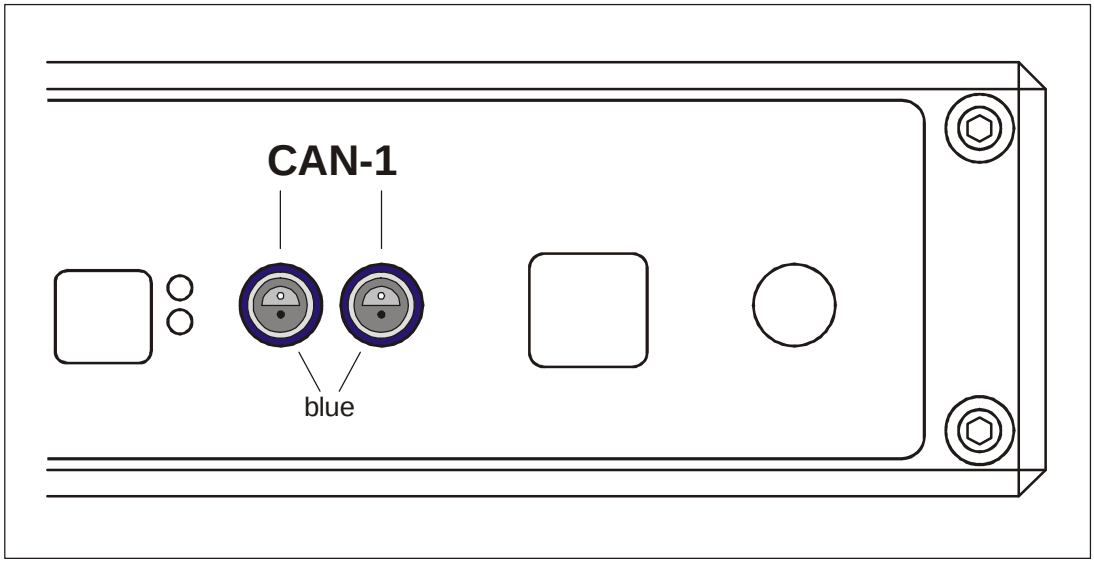

On the backside of the ACW-Lite Box are two independent CAN data buses (CAN-1 and CAN-2). For distinction the plugs of the interface CAN-1 have blue coding rings.

The CAN-1 bus is generally used for all output datas of the box, including temperature and sensor datas.

Both plugs of CAN-1 are internal linked together.

The ACW-Lite Box is classified as terminal device as well as in CAN-1 and CAN-2 bus.
Therefore a ohmic resistance of 120Ω is installed.

For the first communication the factory preset standard is 1MBaud.

Plug connection : CAN plug female

brand: **LEMOSA**
type: **EPL.0S.302.HLNS**

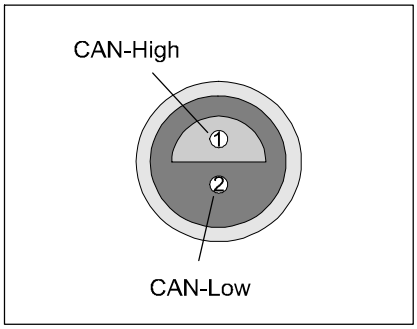

To connect to the CAN bus a special cable with a male plug can be used as follows:

brand:	LEMOSA
type:	FFA.0S.302.CLAC50
additional:	without bending-guard

Important **The CAN interface is compatible to the standard CAN 2.0. The maximum transmission levels for CAN-Low and CAN-High are ±40V !**

CAN-2 Data Bus

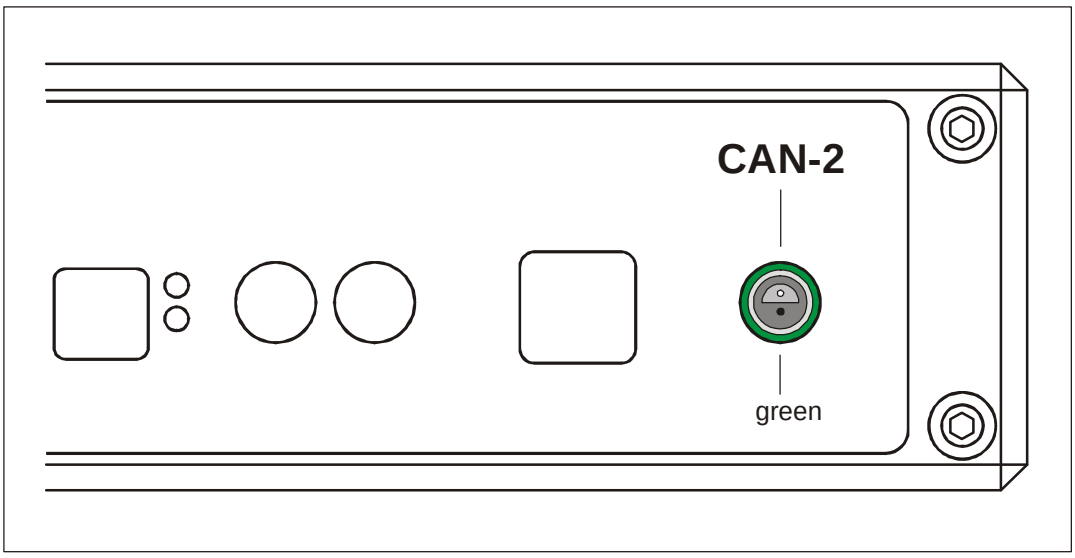

On the backside of the ACW-Lite Box are two independent CAN data buses (CAN-1 and CAN-2). For distinction the plug of the interface CAN-2 has a green coding ring.

The CAN-2 bus is used to read datas from sensors with CAN. The Data Out is over CAN-1.

The ACW-Lite Box is classified as terminal device as well as in CAN-1 and CAN-2 bus.
Therefore a ohmic resistance of 120Ω is installed.

For the first communication the factory preset standard is 1MBaud.

Plug connection : CAN plug female

brand: **LEMOSA**
type: **EPL.0S.302.HLNS**

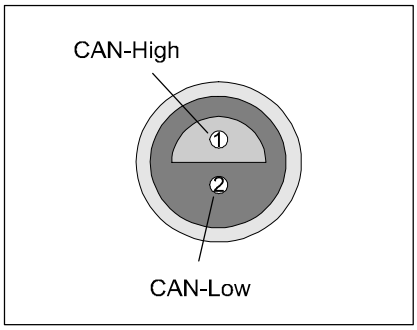

To connect to the CAN bus a special cable with a male plug can be used as follows:

brand:	LEMOSA
type:	FFA.0S.302.CLAC50
additional:	without bending-guard

Important **The CAN interface is compatible to the standard CAN 2.0. The maximum transmission levels for CAN-Low and CAN-High are ±40V !**

USER-Menu

Except configurate the ACW-Lite Box with software running on PC, there is a possibility given for manual configuration.
Also it is possible to have informations directly on the display.

The display is a eight-digit LED display on the front side. The navigation through menus will be done with three keys, the Up-, Down- and Enter-key.

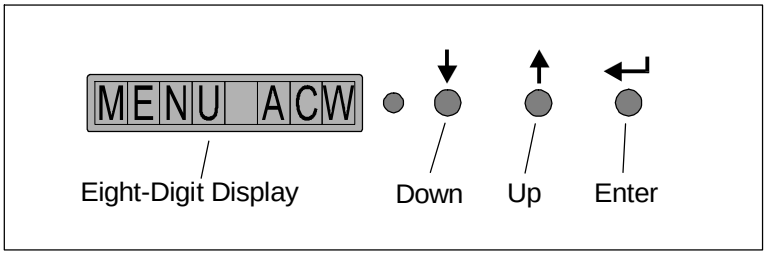

MENU ACW-Lite SETTING		
FILTER SETTING		
	CH1...CH16	
	CH 1-4	LOW BANDWIDTH
	CH 5-8	HIGH BANDWIDTH
	CH 9-12	OFF Max BANDWIDTH
	CH 13-16	BOTH Min BANDWIDTH
	All	EXIT
	EXIT	
SHOW ANALOG DATA ONLINE		
	CH1...CH16	shows selected channel on display
	EXIT	disables channel output on display
EXIT		

BOOT-Menu

In the boot menu several settings for commissioning the system can be done. To go to the boot menu is by depressing one of the three keys during booting the system.

MENU ACW-Lite SETTING			
FILTER SETTING			
	CH1...CH16		
	CH 1-4	LOW BANDWIDTH	
	CH 5-8	HIGH BANDWIDTH	
	CH 9-12	OFF Max BANDWIDTH	
	CH 13-16	BOTH Min BANDWIDTH	
	All	EXIT	
	EXIT		
SHOW ANALOG DATA ONLINE			
	CH1...CH16	shows selected channel on display	
	EXIT	disables channel output on display	
GAIN SETTING (BOOSTING)			
	CH1...CH16		
	CH 1-4	available gain depends on piggy type	
	CH 5-8	0,125 – 8000,0 GAIN SETTING (BOOSTING)	
	CH 9-12	EXIT	
	CH 13-16		
	EXIT		
OFFSET CALIBRATE			
	CH1...CH16		
	CH 1-4	AUTOMATIC OFFSET CALIBRATE	
	CH 5-8	MANUAL OFFSET CALIBRATE	(-32768 - +32767)
	CH 9-12	EXIT	
	CH 13-16		
	All		
	EXIT		
DEFAULT SET Lite			
	HARDWARE DEFAULT		
		NO/YES/EXIT	
	USER DEFAULT		
		SET DEFAULT	If „INIT DEFAULT" not previously selected
		NO/YES/EXIT	FUNCTION NOT AVAILABLE / EXIT
		INIT DEFAULT	save current configuration
		NO/YES/EXIT	then available through „SET DEFAULT"
		EXIT	
	CS-AS/EMT DEFAULT		
		NO/YES/EXIT	
	EXIT		

SPECIAL FUNCTION			
	CH1...CH16		
	CH 1-4	depends on piggy type	
	CH 5-8	+Input set with 2k Ohm to +5V / EXIT	NO/YES/EXIT
	CH 9-12	-Input set to GND / EXIT	NO/YES/EXIT
	CH 13-16	NONE SPECIAL FUNCTION / EXIT	
		NONE TYP Set typ of Piggyback / EXIT	
	EXIT		
SOFTWARE MODE SETTING			
	.t SET DATA RATE .t SETTING	(1-100)ms	
	PB1 MSG SEND	NO/YES/EXIT	enable/disable CAN message
	PB2 MSG SEND	NO/YES/EXIT	
	PB3 MSG SEND	NO/YES/EXIT	
	PB4 MSG SEND	NO/YES/EXIT	
	DIGITAL MSG SEND	NO/YES/EXIT	
	INFO MSG SEND	NO/YES/EXIT	
	TRIGGER ACTIVATE	NO/YES/EXIT	
	USER 1 MSG SEND	NO/YES/EXIT	
	USER 2 MSG SEND	NO/YES/EXIT	
	EXIT		
CAN SETTINGS			
	CAN 1 KBaud SETTING		
	CAN 2 KBaud SETTING	1000KBaud SET BAUD RATE TO 1000KBau	
		500KBaud SET BAUD RATE TO 500KBaud	
		250KBaud SET BAUD RATE TO 250KBaud	
		125KBaud SET BAUD RATE TO 125KBaud	
		EXIT	
	PB 1 ID PIGGYBACK 1 ID SETTING		
	PB 2 ID PIGGYBACK 2 ID SETTING	STANDARD IDENTIFIER	ID (0x000 – 0x7FF)
	PB 3 ID PIGGYBACK 3 ID SETTING	EXTENDED IDENTIFIER	ID (0x00000000 – 0x3FFFFFFF)
	PB 4 ID PIGGYBACK 4 ID SETTING	EXIT	
	DIGITAL ID SETTING		
	INFO ID ACW-LITE INFO ID SETTING		
	TRIGGER ID SETTING		
	TSV ID SETTING		
	USER 1 I USER ID 1 INPUT SET		
	USER 1 O USER ID 1 OUTPUT SET		
	USER 2 I USER ID 2 INPUT SET		
	USER 2 O USER ID 2 OUTPUT SET		
	EXIT		
PIGGYBACK HARDWARE SETTING			
	PB 1 PIGGYBACK 1 SETTING		
	PB 2 PIGGYBACK 2 SETTING	Typ SETTING	depends on piggy type
	PB 3 PIGGYBACK 3 SETTING		ADL / FUNCTION NOT AVAILABLE
	PB 4 PIGGYBACK 4 SETTING		AIO (V/2) Multi Purpose / EXIT
			EXIT
		EXIT	
	EXIT		

CANView SETTING				
	SET Bit1 SETTING OF CANview BIT 1			
	SET Bit2 SETTING OF CANview BIT 2		Bit Pos SETTING	(0-63)
	SET Bit3 SETTING OF CANview BIT 3		Invert DIGITAL OUTPUT	
			No Invert DIGITAL OUTPUT	
			TIMEOUT DEFAULT VALUE	OPEN/CLOSE/EXIT
			EXIT	
	TIME Out SETTING			
		300ms TIMEOUT SET ON		
		NO TIMEOUT		
		EXIT		
	CAN View ID			
	EXIT			
Udms SET ADJUSTABLE Udms SETTING				
	10 Volt SET ADJUSTABLE Udms			
	5 Volt SET ADJUSTABLE Udms			
	2 Volt SET ADJUSTABLE Udms			
	EXIT			
CODE				
	input code (00000000-FFFFFFFF)		NO/YES/EXIT „YES“ to apply (NO/EXIT to ignore)	
EXIT				

CAN Message

1. Message AD_1_4

message	**AD_1_4**
standard Id	0x000
number of bytes	8
transmitter	ACW-Lite Box
number of signals	4
receiver	MACS, ASCET

start bit	No. bits	signal description	signal name	min/max (PH)	format	offset	unit	translation
0	16	analog channel 01	AK_01	-9995/+9995	INTEL SIGNED	0	mV	(PH)=0.305 * (HEX)
16	16	analog channel 02	AK_02	-9995/+9995	INTEL SIGNED	0	mV	(PH)=0.305 * (HEX)
32	16	analog channel 03	AK_03	-9995/+9995	INTEL SIGNED	0	mV	(PH)=0.305 * (HEX)
48	16	analog channel 04	AK_04	-9995/+9995	INTEL SIGNED	0	mV	(PH)=0.305 * (HEX)

2. Message AD_5_8

message	**AD_5_8**
standard Id	0x001
number of bytes	8
transmitter	ACW-Lite Box
number of signals	4
receiver	MACS, ASCET

start bit	No. bits	signal description	signal name	min/max (PH)	format	offset	unit	translation
0	16	analog channel 05	AK_05	-9995/+9995	INTEL SIGNED	0	mV	(PH)=0.305 * (HEX)
16	16	analog channel 06	AK_06	-9995/+9995	INTEL SIGNED	0	mV	(PH)=0.305 * (HEX)
32	16	analog channel 07	AK_07	-9995/+9995	INTEL SIGNED	0	mV	(PH)=0.305 * (HEX)
48	16	analog channel 08	AK_08	-9995/+9995	INTEL SIGNED	0	mV	(PH)=0.305 * (HEX)

3. Message AD_9_12

message	**AD_9_12**
standard Id	0x002
number of bytes	8
transmitter	ACW-Lite Box
number of signals	4
receiver	MACS, ASCET

start bit	No. bits	signal description	signal name	min/max (PH)	format	offset	unit	translation
0	16	analog channel 09	AK_09	-9995/+9995	INTEL SIGNED	0	mV	(PH)=0.305 * (HEX)
16	16	analog channel 10	AK_10	-9995/+9995	INTEL SIGNED	0	mV	(PH)=0.305 * (HEX)
32	16	analog channel 11	AK_11	-9995/+9995	INTEL SIGNED	0	mV	(PH)=0.305 * (HEX)
48	16	analog channel 12	AK_12	-9995/+9995	INTEL SIGNED	0	mV	(PH)=0.305 * (HEX)

4. Message AD_13_16

message	**AD_13_16**
standard Id	0x003
number of bytes	8
transmitter	ACW-Lite Box
number of signals	4
receiver	MACS, ASCET

start bit	No. bits	signal description	signal name	min/max (PH)	format	offset	unit	translation
0	16	analog channel 13	AK_13	-9995/+9995	INTEL SIGNED	0	mV	(PH)=0.305 * (HEX)
16	16	analog channel 14	AK_14	-9995/+9995	INTEL SIGNED	0	mV	(PH)=0.305 * (HEX)
32	16	analog channel 15	AK_15	-9995/+9995	INTEL SIGNED	0	mV	(PH)=0.305 * (HEX)
48	16	analog channel 16	AK_16	-9995/+9995	INTEL SIGNED	0	mV	(PH)=0.305 * (HEX)

5. Message ACW_LITE_INFO

message	**ACW_INFO**
standard Id	0x00C
number of bytes	8
transmitter	ACW-Lite Box
number of signals	3
receiver	MACS, ASCET

start bit	No. bits	signal description	signal name	min/max (PH)	format	offset	unit	remarks
0	16	free time	Delay		INTEL SIGNED	0	-	-
16	16	RAM adress	Adr		INTEL UNSIGNED	0	-	every 20ms
32	32	RAM data	Data		INTEL UNSIGNED	0	-	-

6. Message Temperature

message	**Temperature**
standard Id	0x69A
number of bytes	8
transmitter	ACW-Lite Box
number of signals	4
receiver	MACS, ASCET

start bit	No. bits	signal description	signal name	min/max (PH)	format	offset	unit	translation
0	16	temp. channel 01	TK_01	-200/+960	INTEL SIGNED	0	C°	(PH)=0.1 * (HEX)
16	16	temp. channel 02	TK_02	-200/+960	INTEL SIGNED	0	C°	(PH)=0.1 * (HEX)
32	16	temp. channel 03	TK_03	-200/+960	INTEL SIGNED	0	C°	(PH)=0.1 * (HEX)
48	16	temp. channel 04	TK_04	-200/+960	INTEL SIGNED	0	C°	(PH)=0.1 * (HEX)

7. Message DCW

message	**DCW**
standard Id	0x00A
number of bytes	5
transmitter	ACW-Lite Box
number of signals	26
receiver	MACS, ASCET

start bit	No. bits	signal description	signal na.	min/max (PH)	format	offset	translation
0	1	D-chan. 06 = SubD25_Pin06	EVVL	0/1	INTEL UNSIGNED	0	
1	1	D-chan. 07 = SubD25_Pin07	AVVL	0/1	INTEL UNSIGNED	0	
2	1	D-chan. 08 = SubD25_Pin08	EVVR	0/1	INTEL UNSIGNED	0	
3	1	D-chan. 09 = SubD25_Pin09	AVVR	0/1	INTEL UNSIGNED	0	
4	1	D-chan. 10 = SubD25_Pin10	EVHL	0/1	INTEL UNSIGNED	0	
5	1	D-chan. 11 = SubD25_Pin11	AVHL	0/1	INTEL UNSIGNED	0	
6	1	D-chan. 12 = SubD25_Pin12	EVHR	0/1	INTEL UNSIGNED	0	
7	1	D-chan. 13 = SubD25_Pin13	AVHR	0/1	INTEL UNSIGNED	0	
8	1	D-chan. 01 = SubD25_Pin01	USV1	0/1	INTEL UNSIGNED	0	
9	1	D-chan. 02 = SubD25_Pin02	USV2	0/1	INTEL UNSIGNED	0	
10	1	D-chan. 03 = SubD25_Pin03	ASV1	0/1	INTEL UNSIGNED	0	
11	1	D-chan. 04 = SubD25_Pin04	ASV2	0/1	INTEL UNSIGNED	0	
12	1	D-chan. 05 = SubD25_Pin05	-	0/1	INTEL UNSIGNED	0	
13	1	D-chan. 14 = SubD25_Pin14	MRA	0/1	INTEL UNSIGNED	0	
14	1	D-chan. 15 = SubD25_Pin16	VLPR1	0/1	INTEL UNSIGNED	0	
15	1	D-chan. 16 = SubD25_Pin18	VLPR2	0/1	INTEL UNSIGNED	0	
16	1	**D-chan. 21 = SubD9_Pin01**	-	0/1	INTEL UNSIGNED	0	
17	1	**D-chan. 22 = SubD9_Pin02**	-	0/1	INTEL UNSIGNED	0	
18	1	D-chan. 17 = SubD25_Pin19	-	0/1	INTEL UNSIGNED	0	
19	1	D-chan. 18 = SubD25_Pin20	-	0/1	INTEL UNSIGNED	0	
20	1	D-chan. 19 = SubD25_Pin22	MT_SYNC	0/1	INTEL UNSIGNED	0	
21	1	D-chan. 20 = SubD25_Pin23	-	0/1	INTEL UNSIGNED	0	
22	1	**D-chan. 23 = SubD9_Pin03**	-	0/1	INTEL UNSIGNED	0	
23	1	**D-chan. 24 = SubD9_Pin04**	-	0/1	INTEL UNSIGNED	0	
24	8	DCW_VERSION	DCW_SW	0/255	INTEL UNSIGNED	0	(PH) = 0.1* (HEX)
32	8	DCW_CODIER_SC	DCW_SC	0/255	INTEL UNSIGNED	0	(PH) = (HEX)

8. Message CAN_VIEW

message	**CAN_VIEW**
standard Id	0x190
transmitter	MACS, ASCET
receiver	ACW-Lite Box

The message CAN_VIEW is a received message. In the configuration software it is selected which three bits of the message drive the three output channels.

View Frontside

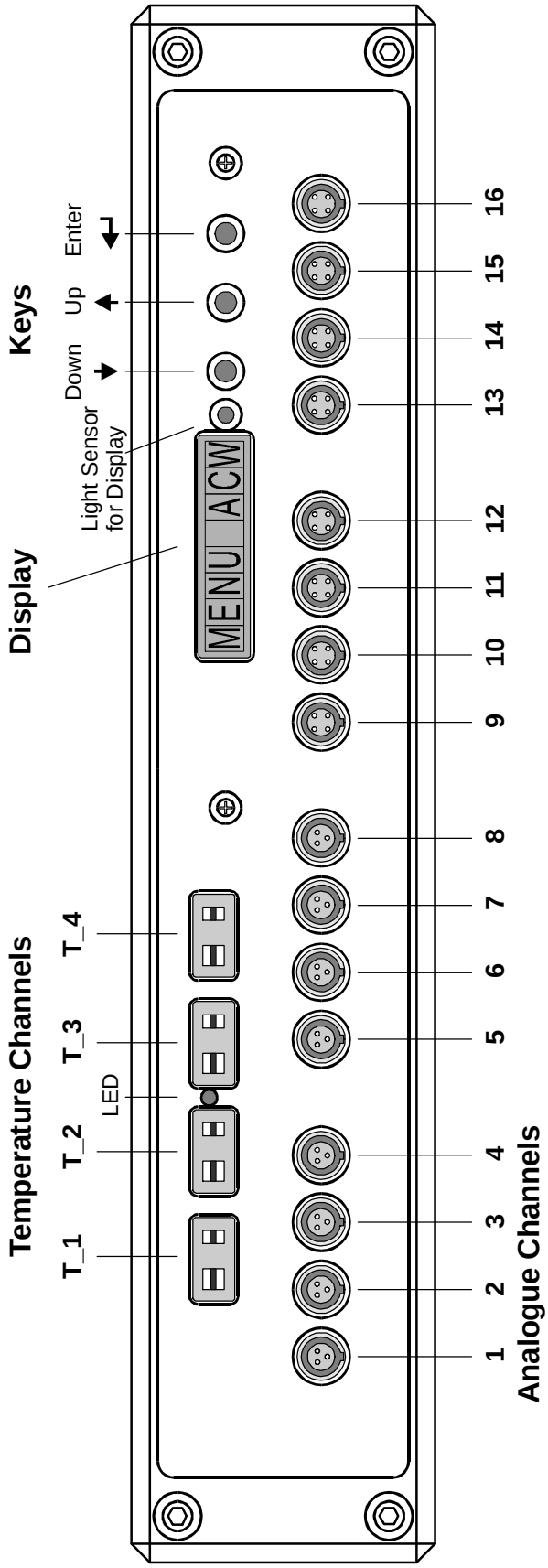

View Backside

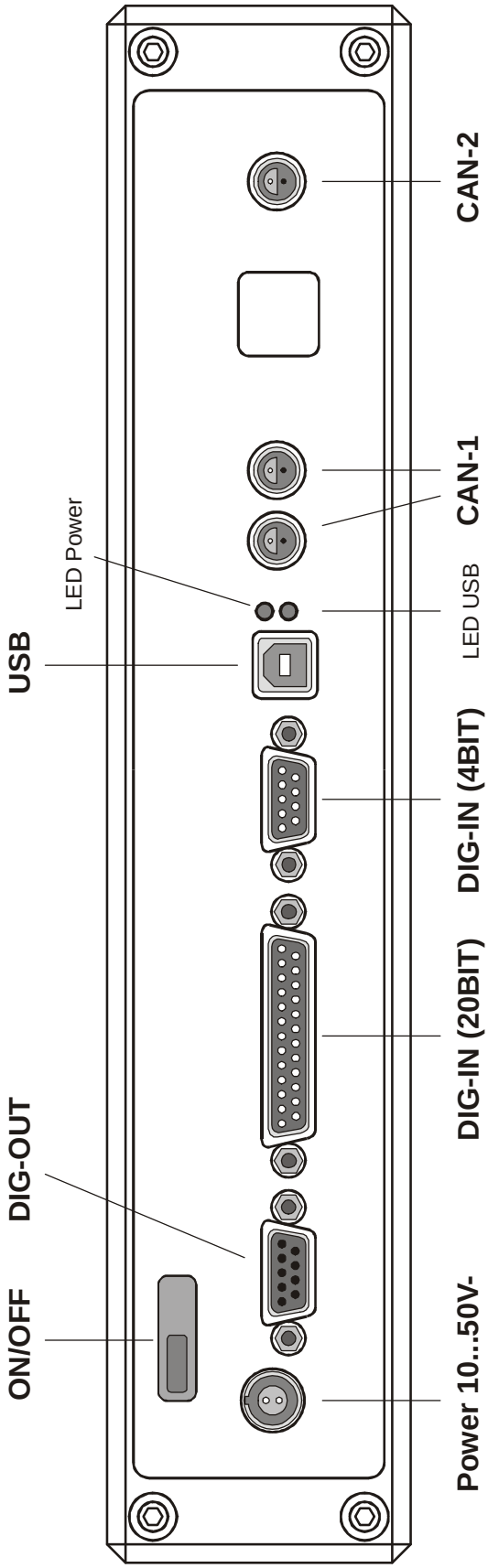

List of Sensors

DS2-Sensor

type: active pressure sensor “DS2“
standard: BOSCH
connect to: Piggyback DS2

Piggyback setting: gain: x2
filter: 65Hz
additional: +Input = via 2kΩ pullup connected to +5V

connection:

signal	DS2 sensor plug	cable color	Piggyback DS2 plug 3pol. LEMO
+ 5V	Pin 3	white	Pin 1
GND	Pin 1	brown	Pin 2
+ IN Signal	Pin 2	green	Pin 3

DMS-Sensor

type: strain gauge sensor
standard: KULITE
connect to: Piggyback DMS

Piggyback setting: gain: x100
filter: 65Hz
U_{DMS}: 10V

connection:

signal	DMS sensor plug	cable color	Piggyback DMS plug 4pol. LEMO
- IN Signal	-	white	Pin 1
GND (- Bridge)	-	black	Pin 2
+ IN Signal	-	green	Pin 3
+ 10V (+ Bridge)	-	red	Pin 4

Acceleration Sensor

type: acceleration sensor
standard: BOSCH
connect to: Piggyback UMP

Piggyback setting: gain: x4
filter: 20Hz
additional: -Input = not used (internal connected to GND)

connection:

signal	accel. sensor plug	cable color	Piggyback UMP plug 5pol. LEMO
-	-	-	Pin 1
GND	Pin 1	brown	Pin 2
-	-	-	Pin 3
+ IN Signal	Pin 2	green	Pin 4
+ 5V	Pin 3	white	Pin 5

LWS-Sensor

type: passive “LWS“ sensor (Poti)
standard: BOSCH
connect to: Piggyback UMP

Piggyback setting: gain: x2
filter: 200Hz
additional: -Input = not used (internal connected to GND)

connection:

signal	LWS sensor plug	cable color	Piggyback UMP plug 5pol. LEMO
-	-	-	Pin 1
GND	Poti E	brown	Pin 2
-	-	-	Pin 3
+ IN Signal	Poti S	green	Pin 4
+ 5V	Poti A	white	Pin 5

DRS2-Sensor

type: yaw rate sensor “DRS2“
standard: BOSCH
connect to: Piggyback UMP

Piggyback setting: gain: x2
filter: 20Hz
additional: -Input = used as differential Input

connection:

signal	DRS2 sensor plug	cable color	Piggyback UMP plug 5pol. LEMO
+12V	Pin 2	white	Pin 1
GND	Pin 1	brown	Pin 2
Ref (+2,5V)	Pin 4	yellow	Pin 3
+ IN Signal	Pin 3	green	Pin 4
-	-	-	Pin 5

MM1-Sensor

type: yaw rate sensor “MM1“
standard: BOSCH
connect to: Piggyback UMP

Piggyback setting: gain: x2
filter: 20Hz
additional: -Input = used as differential Input

connection:

signal	MM1 sensor plug	cable color	Piggyback UNI plug 5pol. LEMO
+12V	Pin 3	white	Pin 1
GND	Pin 6	brown	Pin 2
Ref (+2,5V)	Pin 1	yellow	Pin 3
+ IN Signal	Pin 4	green	Pin 4
-	-	-	Pin 5

Specification ACW-Lite Box

digital input channels	quantity:	24
	connection:	SubD25 plug male, SubD9 plug male
	voltage opto-in on	1,5V...3,4V / 2,5Volt typ.
digital output channels	quantity:	4
	connection:	SubD9 plug female
	voltage opto-out	max. 50V / 150mW
analoque input channels	quantity:	16
	connection:	LEMO-plug
	type:	DS2 pressure sensors (DS2)
		strain gauge sensors (DMS)
		bipolar voltage sensors (BIP)
		multi purpose sensors (UMP)
	filter order	> 4th order digital
	filter edge frequency	3,125kHz or 15,625kHz
	response time Umin to Umax	13msec @3125Hz 3ms @15625Hz
	resolution:	16bit output / >16bit intern
	multiplexing:	none, all channels are measured at same time
	aliasing error:	none

 © Gi-E GmbH Zaberfeld

Specification ACW-Lite Box

analoque input channels accuracy:

	typ	max	typ	max	typ	max
with Filter edge freqency 3125Hz						
analog channels DS2, BIP, UMP	Gain 1 2V +-0.1%	2V +-0.2%	Gain 1/6 10V +-0.05%	10V +-0.1%	Gain 1/60 100V +-0.05%	100V+-0.1%
analog channels DMS	Gain 1 2V +-0.1%	2V +-0.2%	Gain 100 2V +-0.05%	2V +-0.1%	Gain1000 2V +-0.05%	2V +-0.1%
with Filter edge freqency 15625Hz						
analog channels DS2, BIP, UMP	Gain 1 2V +-0.8%	2V +-1.5%	Gain 1/6 10V +-0.8%	10V +-1.5%	Gain 1/60 100V +-0.8%	100V+-1.5%
analog channels DMS	Gain 1 2V +-0.8%	2V +-1.5%	Gain 100 2V +-0.8%	2V +-2.0%	Gain 1000 2V +-0.8%	2V +-1.5%

 © Gi-E GmbH Zaberfeld

Specification ACW-Lite Box

temperature channels	quantity:	4
	sensor:	temperature sensor type K (NiCrNi)
	connection:	miniature thermoelectric element plug
	measuring range	-200℃ ... 960℃ (>1000℃@80mV)
	measure update	800mSec.
	input range temp.	-40mV .. +40mV (+-80mV)
	input range analog	+-40mV,+-80mV,+-160mV,+-320mV,+-725mV, +-1.25V,+-2.5V
	resolution:	16bit output / >15bit intern
	resolution temp.	0.1℃
	temp. Accuracy:	+-0.5℃ @ 25℃ / +0,3℃ typ.
sensor voltage out	voltages:	2V/5V/10V and +-12V/+-15V dependent by piggy
	accuracy:	

	typ	max	typ	max
selected 2V, 5V or 10V	HW Rev. 411		HW Rev. 412	
	2V +-2%	2V +-4%	2V +-0.4%	2V +-1.0%
	5V +-1%	5V +-3%	5V +-0.3%	5V +-0.8%
	10V +-1%	10V +-3%	10V +-0.3%	10V +-0.8%
selected +-12V or +-15V				
	+-12V +-2%	+-12V +-6%	+-12V +-2%	+-12V +-6%
	+-15V +-2%	+-15V +-6%	+-15V +-2%	+-15V +-6%

Sensor-current-out	
2V/5V/10V	35mA typ. each channel
+-12V/+-15V	35mA typ. each channel
	0.6A typ. for 16 channels
Overcurrent Limitation	0,6A each piggy (4 channels)

Specification ACW-Lite Box

interfaces:	multipurp. serial bus	USB
	CAN bus	CAN-1
	CAN bus	CAN-2
data output:	via CAN	as CAN message
	baud rate:	125kBaud ... 1MBaud
	bus termination:	resistance 120Ω
programming:	manual	display and keys
	via PC software	configuration software
power supply:		+10 ... +50 V DC
power consumption:		max. 30W with sonsor supply
environmental temperature:	system in work:	-20℃ .. .+75℃
air humidity:	system in work:	10% ... 90% relative humidity, not condensing
dimensions:	width:	295 mm
	length:	190 mm + approximately 25 mm plug length
	height:	58 mm

 © Gi-E GmbH Zaberfeld